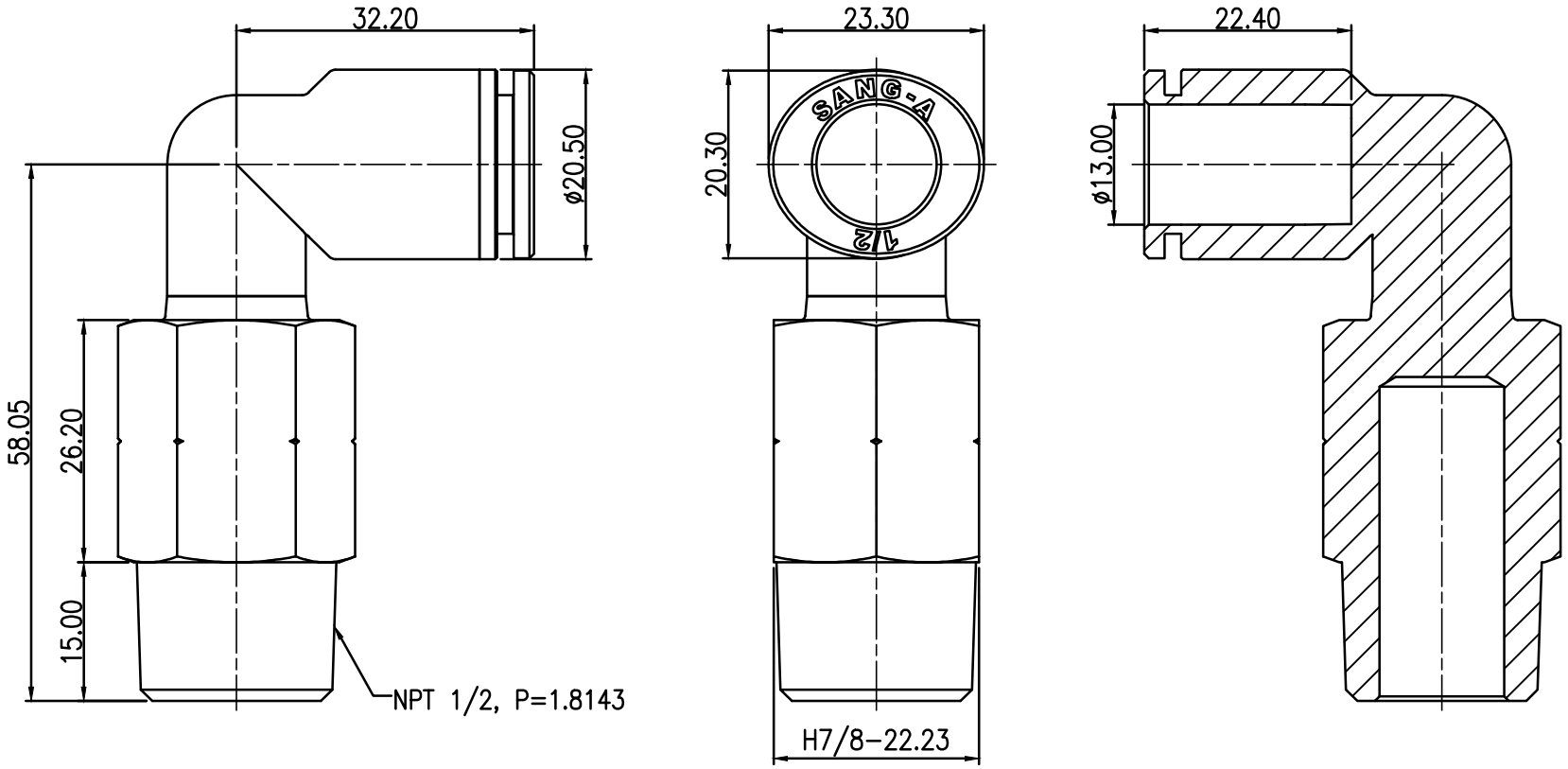
32.20
ø20.50
58.05
26.20
15.00
NPT 1/2, P=1.8143
23.30
20.30
SANG-A
1/2
H7/8-22.23
22.40
ø13.00